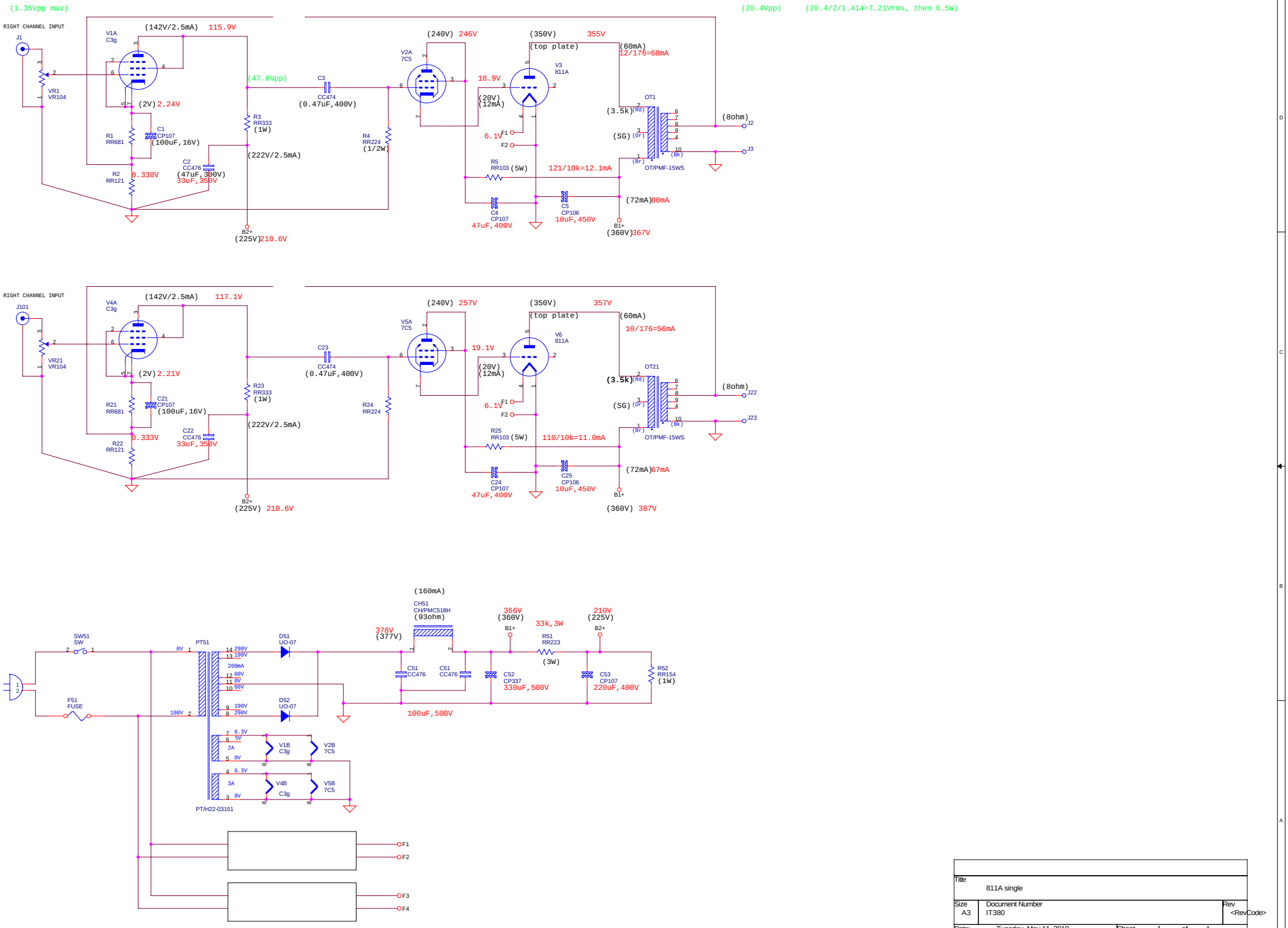

Title	811A single	
Size A3	Document Number IT380	Rev <RevCode>
Date: Tuesday, May 11, 2010	Sheet 1 of 1	