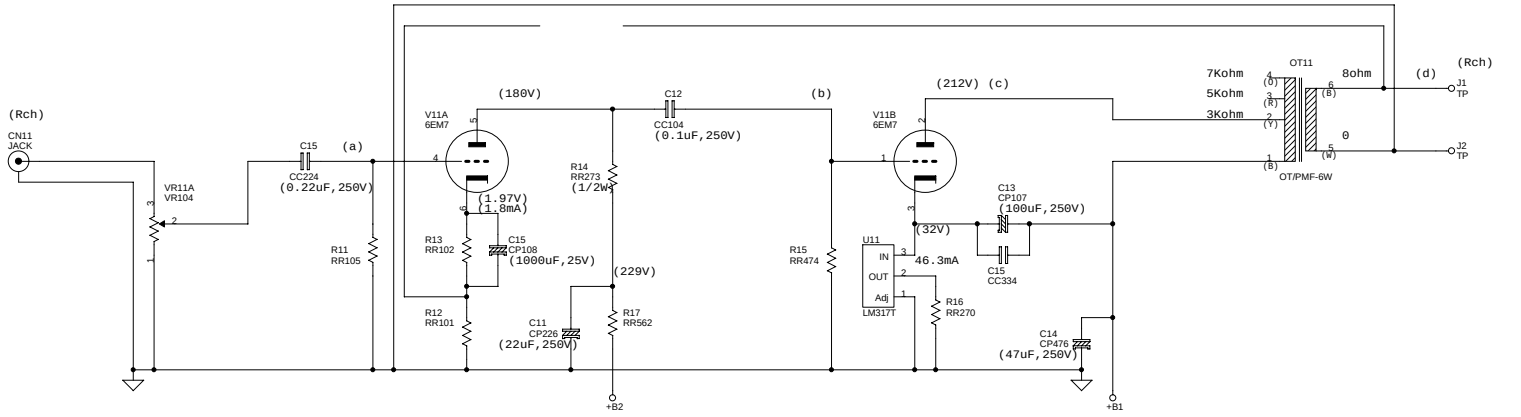
(Rch)
CN11
JACK
VR11A
VR104
C15
CC224
(0.22uF,250V)
(a)
R11
RR105
V11A
6EM7
(180V)
(1.97V)
(1.8mA)
R13
RR102
C15
CP108
(1000uF,25V)
R12
RR101
C11
CP226
(22uF,250V)
R14
RR273
(1/2W)
(229V)
R17
RR562
+B2
C12
CC104
(0.1uF,250V)
(b)
R15
RR474
V11B
6EM7
(212V) (c)
(32V)
U11
IN
OUT
Adj
LM317T
46.3mA
R16
RR270
C13
CP107
(100uF,250V)
C15
CC334
C14
CP476
(47uF,250V)
+B1
7Kohm
5Kohm
3Kohm
OT11
8ohm
0
OT/PMF-6W
(d)
(Rch)
J1
TP
J2
TP

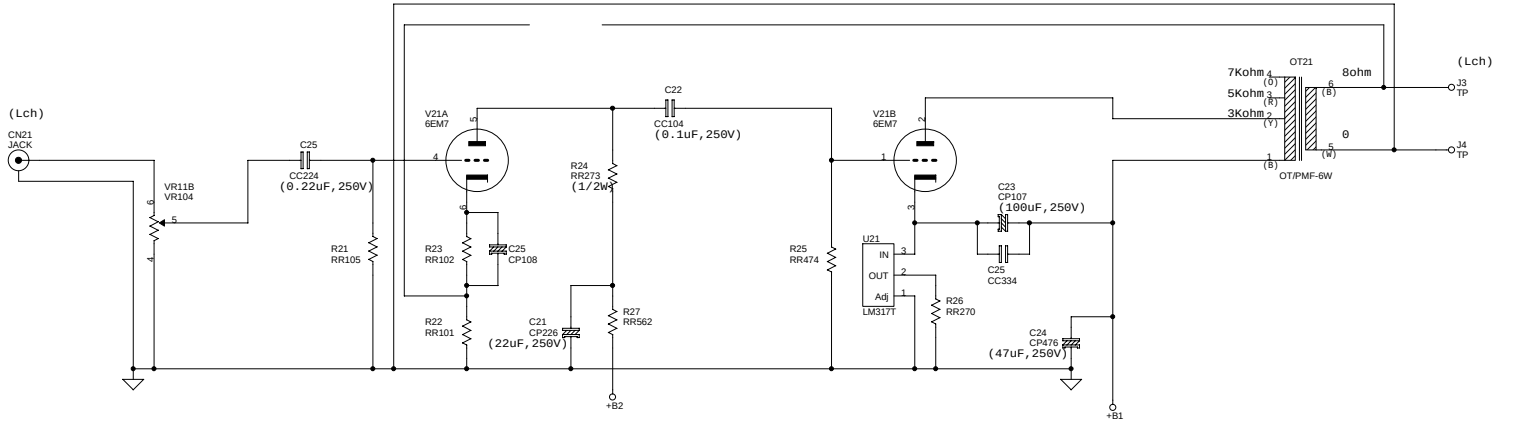
(Lch)
CN21
JACK
VR11B
VR104
C25
CC224
(0.22uF,250V)
R21
RR105
V21A
6EM7
R23
RR102
C25
CP108
R22
RR101
C21
CP226
(22uF,250V)
R24
RR273
(1/2W)
R27
RR562
+B2
C22
CC104
(0.1uF,250V)
R25
RR474
V21B
6EM7
U21
IN
OUT
Adj
LM317T
R26
RR270
C23
CP107
(100uF,250V)
C25
CC334
C24
CP476
(47uF,250V)
+B1
7Kohm
5Kohm
3Kohm
OT21
8ohm
0
OT/PMF-6W
(Lch)
J3
TP
J4
TP

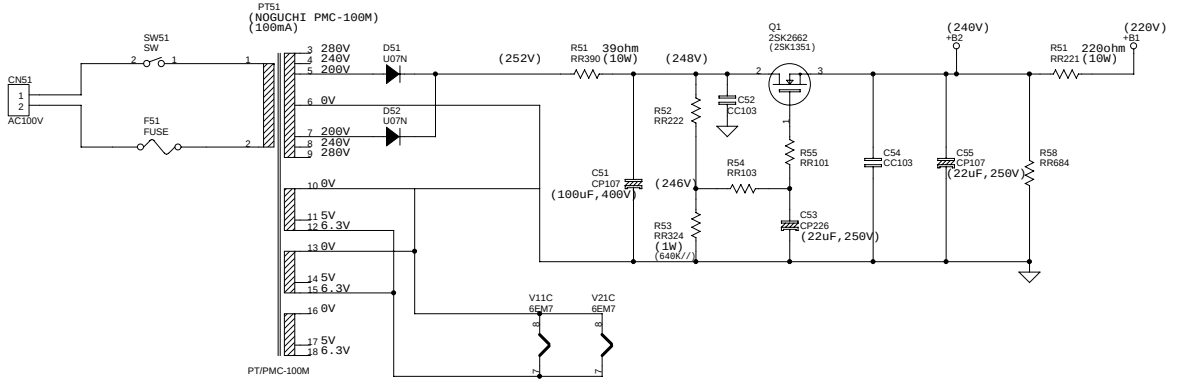
PT51
(NOGUCHI PMC-100M)
(100mA)
SW51
SW
CN51
AC100V
F51
FUSE
280V
240V
200V
0V
200V
240V
280V
0V
5V
6.3V
0V
5V
6.3V
0V
5V
6.3V
PT/PMC-100M
D51
U07N
D52
U07N
(252V)
R51
RR390
39ohm
(10W)
(248V)
C51
CP107
(100uF,400V)
(246V)
R52
RR222
C52
CC103
R53
RR324
(1W)
(640K//)
R54
RR103
Q1
2SK2662
(2SK1351)
R55
RR101
C53
CP226
(22uF,250V)
C54
CC103
(240V)
+B2
C55
CP107
(22uF,250V)
R58
RR684
R51
RR221
220ohm
(10W)
(220V)
+B1
V11C
6EM7
V21C
6EM7