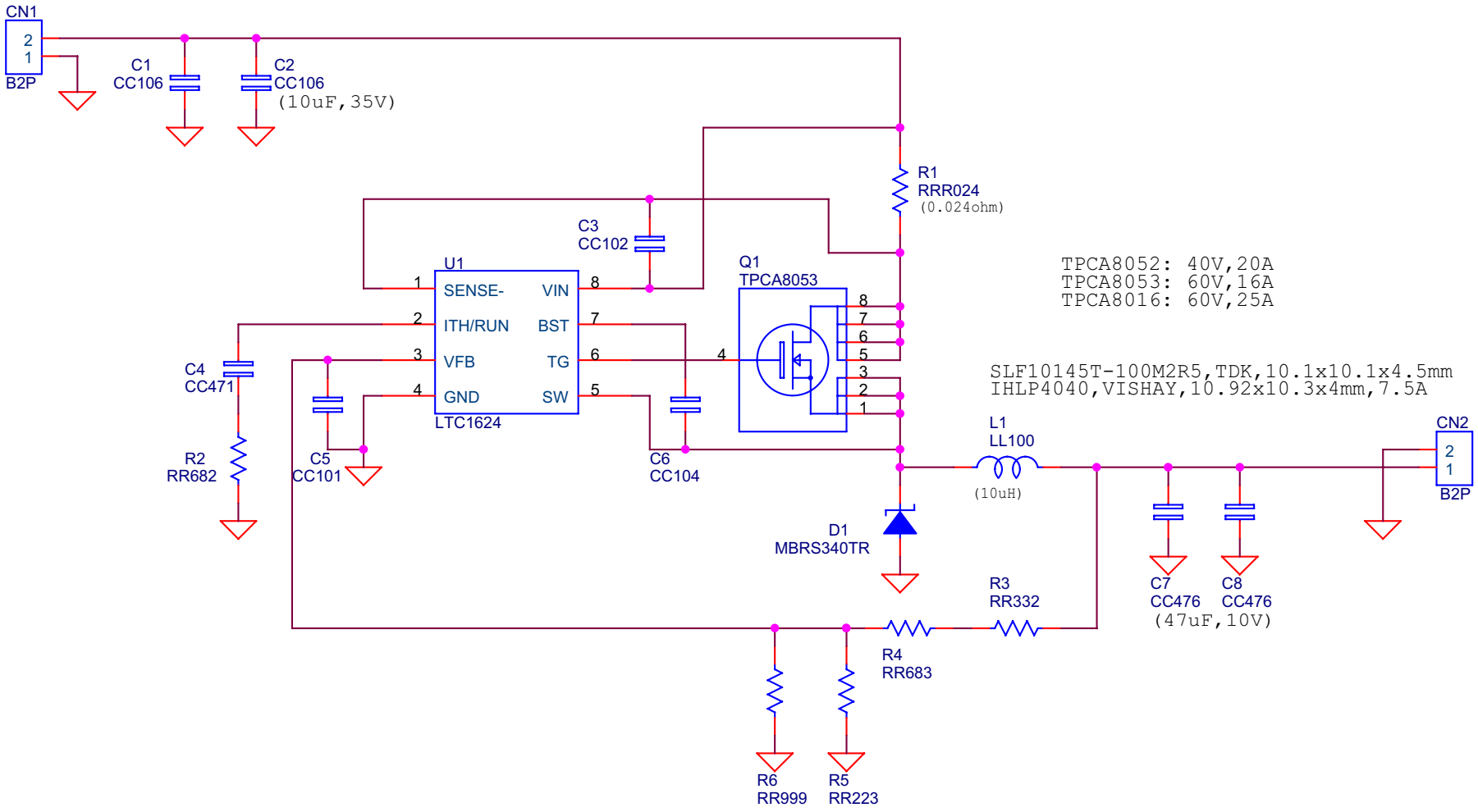
CN1
2
1
B2P
C1
CC106
C2
CC106
(10uF,35V)
R1
RRR024
(0.024ohm)
C3
CC102
U1
SENSE-
ITH/RUN
VFB
GND
VIN
BST
TG
SW
LTC1624
Q1
TPCA8053
TPCA8052: 40V,20A
TPCA8053: 60V,16A
TPCA8016: 60V,25A
C4
CC471
R2
RR682
C5
CC101
C6
CC104
SLF10145T-100M2R5,TDK,10.1x10.1x4.5mm
IHLP4040,VISHAY,10.92x10.3x4mm,7.5A
L1
LL100
(10uH)
CN2
2
1
B2P
D1
MBRS340TR
C7
CC476
C8
CC476
(47uF,10V)
R3
RR332
R4
RR683
R6
RR999
R5
RR223