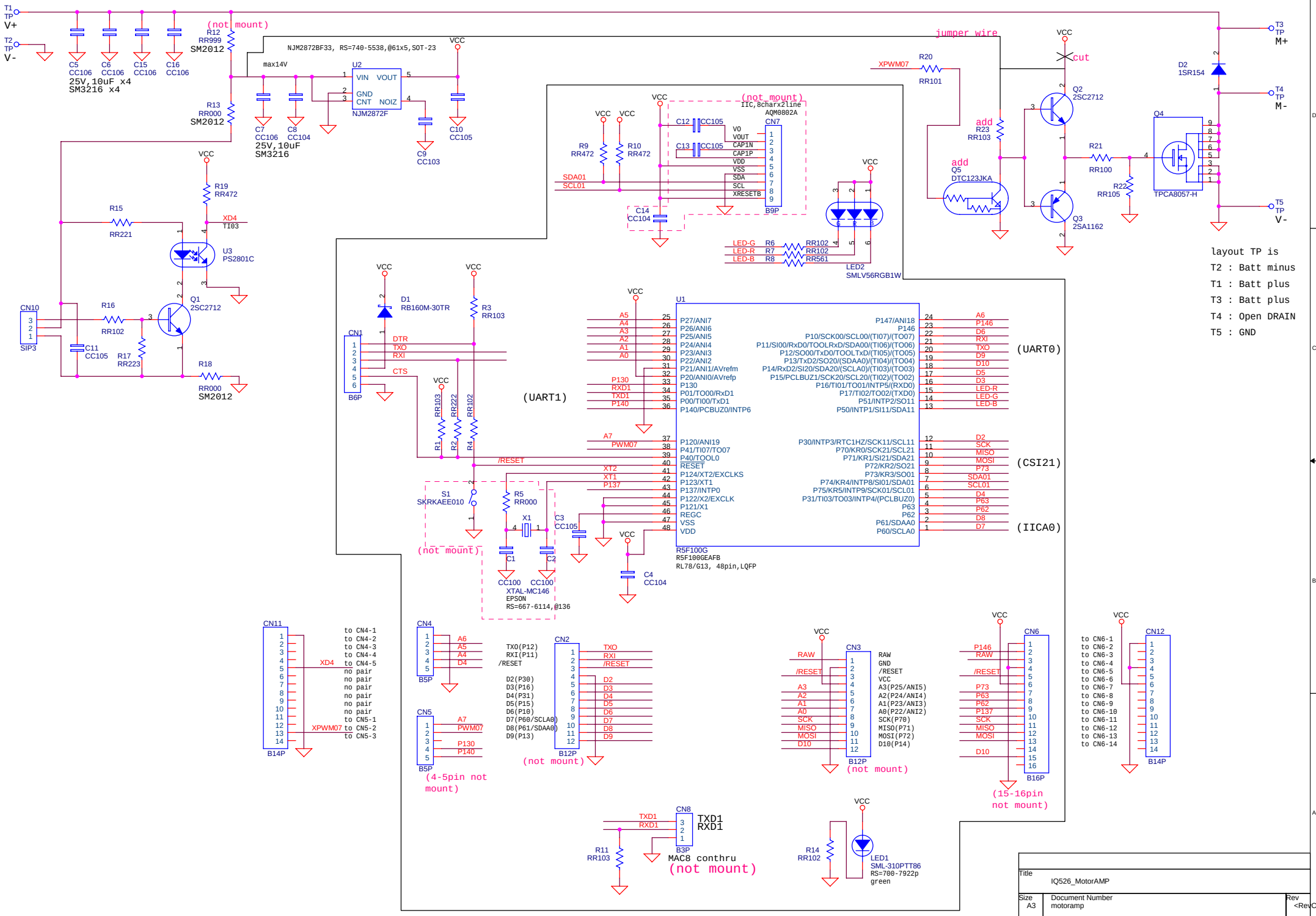
T1 TP V+
T2 TP V-
C5 CC106
C6 CC106
C15 CC106
C16 CC106
25V,10uF x4
SM3216 x4
(not mount)
R12 RR999 SM2012
R13 RR000 SM2012
NJM2872BF33, RS=740-5538,@61x5,SOT-23
max14V
U2
VIN VOUT
GND
CNT NOIZ
NJM2872F
C7 CC106
C8 CC104
25V,10uF
SM3216
C9 CC103
C10 CC105
VCC
R19 RR472
R15 RR221
XD4 TI03
U3 PS2801C
CN10
SIP3
R16 RR102
Q1 2SC2712
C11 CC105
R17 RR223
R18 RR000 SM2012
D1 RB160M-30TR
R3 RR103
CN1
B6P
DTR
TXO
RXI
CTS
(UART1)
RR103
RR222
RR102
R1
R2
R4
/RESET
S1 SKRKAEE010
R5 RR000
X1
C3 CC105
C1 CC100
C2 CC100
XTAL-MC146
EPSON
RS=667-6114,@136
C4 CC104
U1
R5F100G
R5F100GEAFB
RL78/G13, 48pin,LQFP
P27/ANI7
P26/ANI6
P25/ANI5
P24/ANI4
P23/ANI3
P22/ANI2
P21/ANI1/AVrefm
P20/ANI0/AVrefp
P130
P01/TO00/RxD1
P00/TI00/TxD1
P140/PCBUZ0/INTP6
P120/ANI19
P41/TI07/TO07
P40/TOOL0
RESET
P124/XT2/EXCLKS
P123/XT1
P137/INTP0
P122/X2/EXCLK
P121/X1
REGC
VSS
VDD
P147/ANI18
P146
P10/SCK00/SCL00/(TI07)/(TO07)
P11/SI00/RxD0/TOOLRxD/SDA00/(TI06)/(TO06)
P12/SO00/TxD0/TOOLTxD/(TI05)/(TO05)
P13/TxD2/SO20/(SDAA0)/(TI04)/(TO04)
P14/RxD2/SI20/SDA20/(SCLA0)/(TI03)/(TO03)
P15/PCLBUZ1/SCK20/SCL20/(TI02)/(TO02)
P16/TI01/TO01/INTP5/(RXD0)
P17/TI02/TO02/(TXD0)
P51/INTP2/SO11
P50/INTP1/SI11/SDA11
(UART0)
P30/INTP3/RTC1HZ/SCK11/SCL11
P70/KR0/SCK21/SCL21
P71/KR1/SI21/SDA21
P72/KR2/SO21
P73/KR3/SO01
P74/KR4/INTP8/SI01/SDA01
P75/KR5/INTP9/SCK01/SCL01
P31/TI03/TO03/INTP4/(PCLBUZ0)
P63
P62
P61/SDAA0
P60/SCLA0
(CSI21)
(IICA0)
CN11
B14P
to CN4-1
to CN4-2
to CN4-3
to CN4-4
to CN4-5
no pair
no pair
no pair
no pair
no pair
no pair
to CN5-1
to CN5-2
to CN5-3
XD4
XPWM07
CN4
B5P
CN5
B5P
(4-5pin not mount)
TXO(P12)
RXI(P11)
/RESET
D2(P30)
D3(P16)
D4(P31)
D5(P15)
D6(P10)
D7(P60/SCLA0)
D8(P61/SDAA0)
D9(P13)
CN2
B12P
(not mount)
CN3
B12P
(not mount)
RAW
GND
/RESET
VCC
A3(P25/ANI5)
A2(P24/ANI4)
A1(P23/ANI3)
A0(P22/ANI2)
SCK(P70)
MISO(P71)
MOSI(P72)
D10(P14)
CN6
B16P
(15-16pin not mount)
CN12
B14P
to CN6-1
to CN6-2
to CN6-3
to CN6-4
to CN6-5
to CN6-6
to CN6-7
to CN6-8
to CN6-9
to CN6-10
to CN6-11
to CN6-12
to CN6-13
to CN6-14
CN8
B3P
TXD1
RXD1
R11 RR103
MAC8 conthru
(not mount)
R14 RR102
LED1
SML-310PTT86
RS=700-7922p
green
(not mount)
IIC,8charx2line
AQM0802A
CN7
B9P
VO
VOUT
CAP1N
CAP1P
VDD
VSS
SDA
SCL
XRESETB
C12 CC105
C13 CC105
C14 CC104
R9 RR472
R10 RR472
SDA01
SCL01
LED-G R6 RR102
LED-R R7 RR102
LED-B R8 RR561
LED2
SMLV56RGB1W
XPWM07
R20 RR101
jumper wire
cut
add R23 RR103
add Q5 DTC123JKA
Q2 2SC2712
Q3 2SA1162
R21 RR100
R22 RR105
Q4
TPCA8057-H
D2 1SR154
T3 TP M+
T4 TP M-
T5 TP V-
layout TP is
T2 : Batt minus
T1 : Batt plus
T3 : Batt plus
T4 : Open DRAIN
T5 : GND
Title
IQ526_MotorAMP
Size A3
Document Number
motoramp
Rev
<RevCode>
Date: Tuesday, January 26, 2016
Sheet 1 of 1