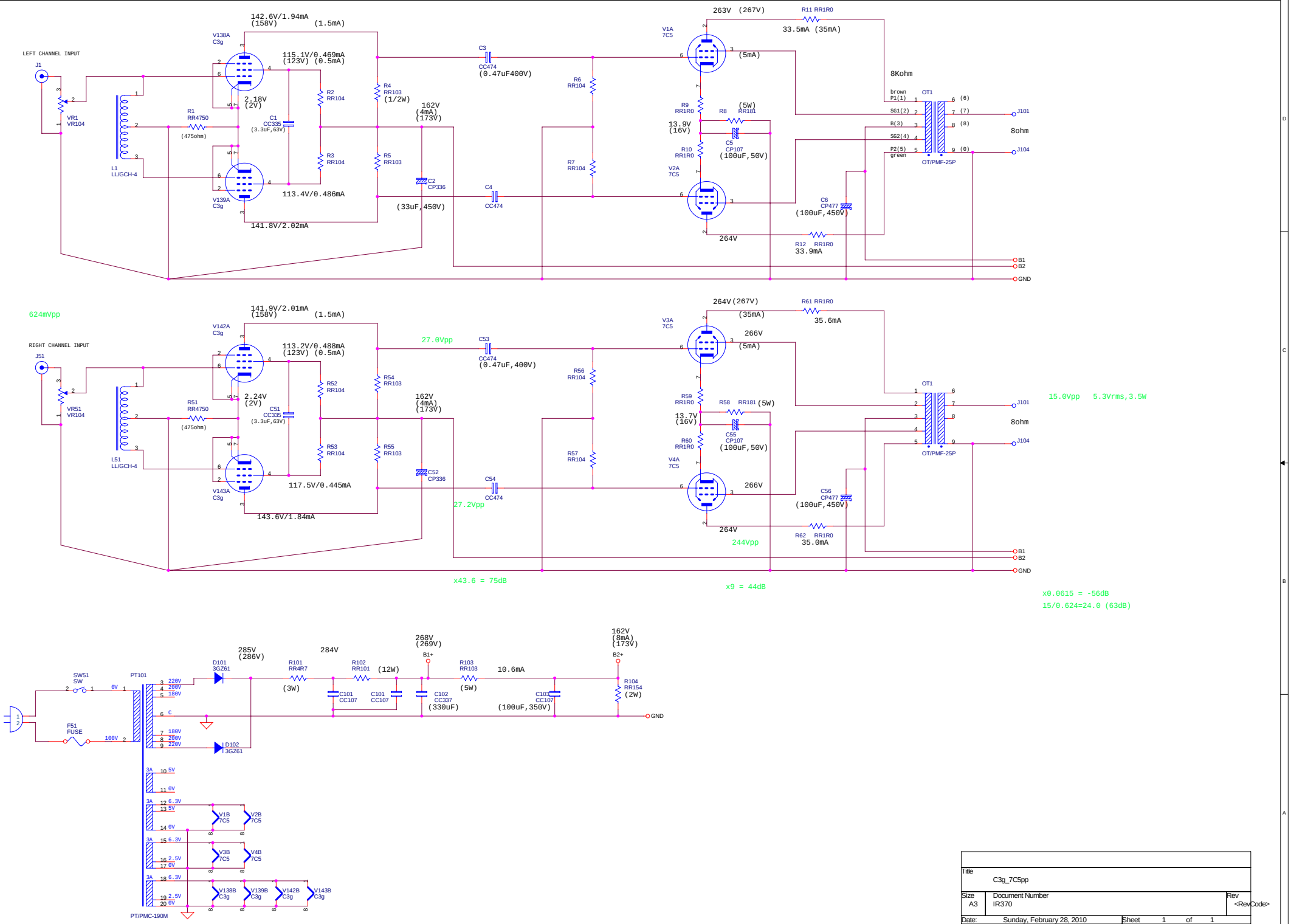

Title	C3g_7C5pp	
Size A3	Document Number IR370	Rev <RevCode>
Date: Sunday, February 28, 2010	Sheet 1 of 1	